Marchio / Brand ZUCCHETTI

Classe / Class DOCCE

SHOWER

Z93107 Asta murale singola. / Slide rail with adjustable bracket.



Asta murale singola, barra da 800 mm

Slide rail with adjustable bracket. Length 800 mm

Marchio / Brand ZUCCHETTI

Classe / Class DOCCE

SHOWER

Z93107

Finiture / Finishes



Cromo / Chrome



P21

PVD brushed chocolate / PVD brushed chocolate



P30

British Gold PVD / British Gold PVD



P31

Brushed PVD British gold / Brushed PVD British gold



P60

Platino PVD / Platinum PVD

Note / Notes

SHOWER

Z93107 Disegno Complessivo / Overall Drawing

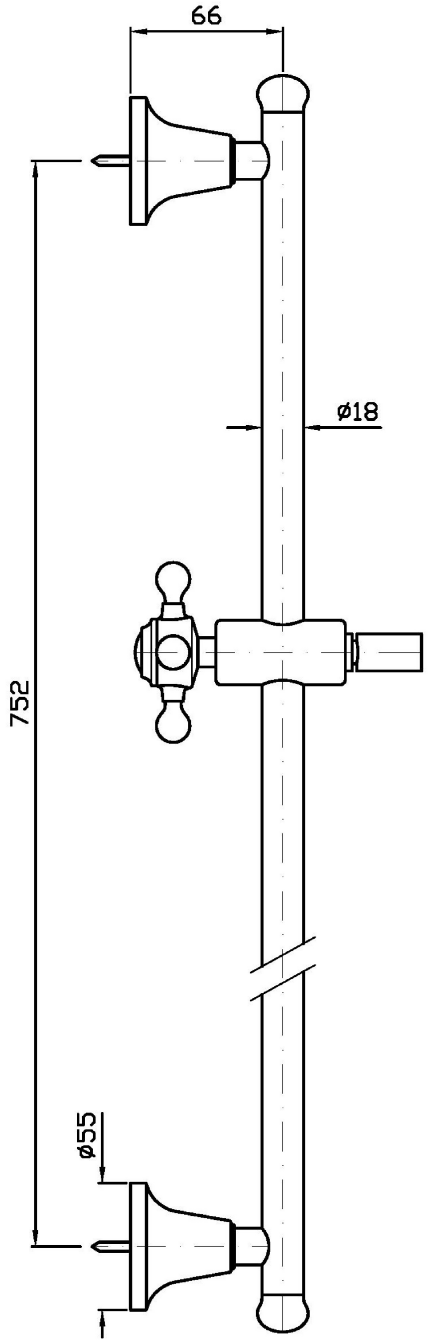

SHOWER

Z93107 Pesi e Misure / Weights and Sizes

Peso (Kg) Weight (lb)	1,95 (Kg)	4,30 (lb)
Volume test (dc3) - (in3)	12,29 (dc3)	749,98 (in3)
h (mm) - (in)	95,00 (mm)	3,74 (in)
L1 (mm) - (in)	155,00 (mm)	6,10 (in)
L2 (mm) - (in)	835,00 (mm)	32,87 (in)

