Marchio / Brand ZUCCHETTI

Classe / Class VARI

MISCELLANEOUS

R97755 Scarico universale. / Pop-up waste.



Scarico universale. Chiusura a pressione.

Pop-up waste, with push system.

Marchio / Brand ZUCCHETTI

Classe / Class VARI

MISCELLANEOUS

R97755

Finiture / Finishes



Cromo / Chrome



C3

Nickel Spazzolato / Brushed Nickel



C8

Nickel Lucido / Polished Nickel



C50

Metal Black / Metal Black



C51

Metal Black spazzolato / Brushed Metal Black



N6

Nero opaco / Matt black



P21

PVD brushed chocolate / PVD brushed chocolate



P30

British Gold PVD / British Gold PVD



P31

Brushed PVD British gold / Brushed PVD British gold



P41

PVD Oro Spazzolato / PVD Brushed Gold



P60

Platino PVD / Platinum PVD



P80

Total black PVD / Total black PVD



P81

Brushed total black PVD / Brushed total black PVD

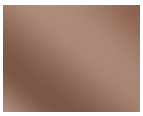

P90

Copper PVD / Copper PVD



P91

Brushed PVD Copper / Brushed PVD Copper



J3

Glossy gesso / Glossy gesso



K7

Pearl cipria / Pearl cipria



R6

Pearl chili / Pearl chili



V7

Pearl salvia / Pearl salvia



V8

Matt mirto / Matt mirto

Note / Notes

MISCELLANEOUS

R97755 Disegno Complessivo / Overall Drawing

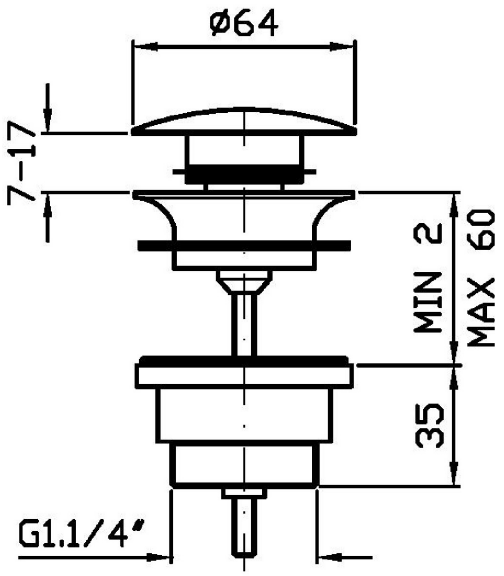

MISCELLANEOUS

R97755 Pesi e Misure / Weights and Sizes

Peso (Kg) Weight (lb)	0,32 (Kg)	0,71 (lb)
Volume test (dc3) - (in3)	0,47 (dc3)	28,68 (in3)
h (mm) - (in)	94,00 (mm)	3,70 (in)
L1 (mm) - (in)	71,00 (mm)	2,80 (in)
L2 (mm) - (in)	71,00 (mm)	2,80 (in)

